AM solutions
3D post processing technology

F1 – Fully automated, high-precision sieving and mixing in a closed loop

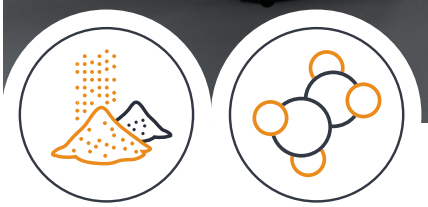

Powder handling Polymers

Features & benefits

- **Fully automated powder processing:** Efficient and economical powder conditioning, sieving and mixing of virgin and new powder
- **Consistent powder quality:** Highest dosing accuracy of ±2 % and ultrasonic sieve for stable production processes and consistent part quality
- **Improved powder behavior:** Targeted powder conditioning reduces electrostatic effects, improves flowability, and ensures stable printing conditions
- **High performance:** Processing of up to 40 kg/h of powder for EOS polymer printers using PA 12 (PA 2200)
- **Maximum work safety:** Protection of employees from powder contact and ensuring clean processes thanks to a closed-loop powder system

Description

The F1 powder handling system enables automated powder conditioning, sieving and mixing of virgin and used powder in a closed loop, ensuring maximum quality and the highest level of process and operator safety in polymer 3D printing. A 245 µm ultrasonic sieve reliably removes contaminants and agglomerates. At the same time, the F1 ensures a high dosing accuracy of ±2 % and allows for flexible mixing ratios. With a throughput of up to 40 kg/h (reference value for PA 12 (PA 2200), it can be seamlessly integrated into existing process chains and supports various container formats, making it ideal for EOS polymer printers using different materials. When combined with the D1 unpacking station, used powder is immediately reusable, resulting in more sustainable and cost-effective production. For subsequent automated powder supply to one or more printers, the DFS and PMS provide suitable solutions.

Equipment layout

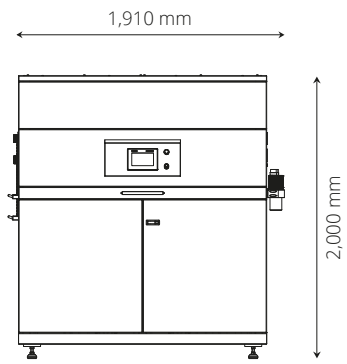

Front view

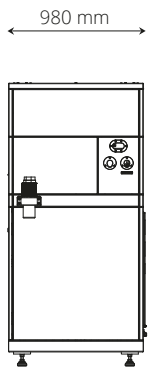

Side view

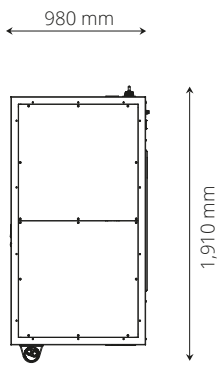

Top view

Equipment specifications

Technical data
Mixing capacity: 40 kg/h
Ultrasonic sieve: 245 µm standard
Material: PA12 (PA 2200)
Drive power: 3 kW
Noise level: ≤ 75 dB(A)

Installation conditions
Supply voltage: 230 V, 50 Hz (US: 2x 110 V)
Control voltage: 24 V DC
Compressed air connection: R 1/2", male connector, 6 bar
Transport: Forklift, pallet truck
Machine empty weight: ≈ 793 kg

Publ.-Nr.: EN.367.02 F1 – Revision: 11/2026 – Specifications are subject to change without notice.